Current part is item (3) on diagram. Available at www.oshkoshequipment.com

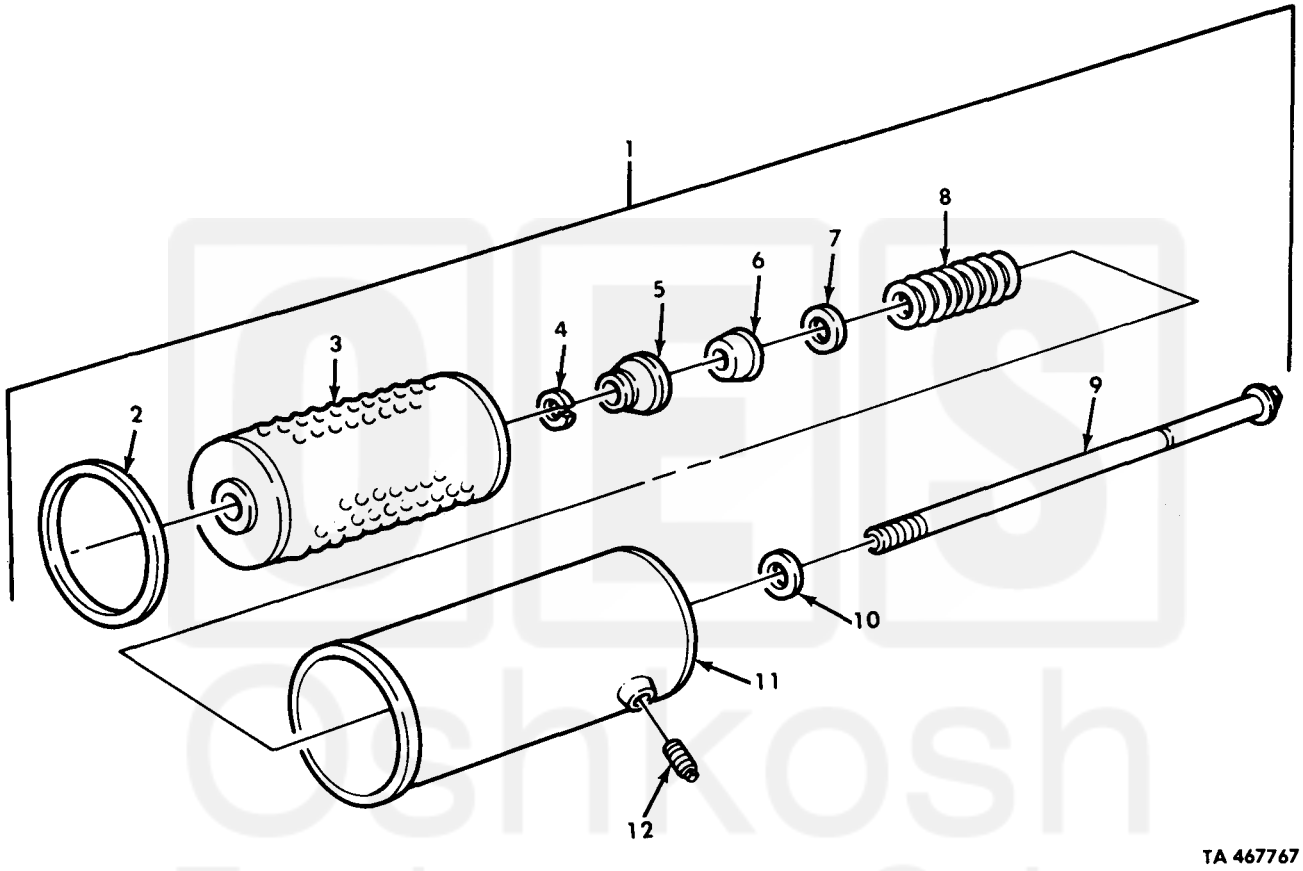

Figure 17. Lubricating Oil Filter.

Current part is item (3) on diagram. Available at www.oshkoshequipment.com

Current part is item (3) on diagram. Available at www.oshkoshequipment.com

(1) ILLUS. (a) FIG. NO.	(2) (b) ITEM NO.	(2) SMR CODE	(3) NATIONAL STOCK NUMBER	(4) PART NUMBER	(5) FSCM	(6) DESCRIPTION USABLE ON CODE	(7) U/M	(8) QTY INC IN UNIT
						GROUP 0106 ENGINE LUBRICATION SYSTEM FIG.17 LUBRICATING OIL FILTER		
17	1	PAOOO	2940-00-552-3842	252916	33457	OIL FILTER ASSEMBLY	EA	1
17	2	KFOZZ		153528	15434	SEAL,OIL PART OF KIT P/N AR51480,3011472	EA	1
17	3	KFOZZ		158139	15434	CARTRIDGE PART OF KIT P/N AR51480	EA	1
17	4	PAOZZ	5365-01-209-7625	3301956	15434	RING,RETAINING	EA	1
17	5	PAOZZ	1680-01-100-5608	153521	15434	SUPPORT,CARTRIDGE	EA	1
17	6	PAOZZ	5330-01-044-2096	153518	15434	GASKET	EA	1
17	7	PAOZZ	5310-00-249-6540	153520	15434	WASHER,FLAT	EA	1
17	8	PAOZZ	5360-01-118-5596	153519-S	15434	SPRING,HELICAL	EA	1
17	9	PAOZZ	5306-01-118-2300	3301954	15434	BOLT,MACHINE	EA	1
17	10	PAOZZ	5310-00-246-0221	8265	15434	WASHER,FLAT	EA	1
17	11	PAOZZ	4930-01-124-3523	153516	15434	SHELL,OIL FILTER	EA	1
17	12	PAOZZ	4730-00-924-7886	5M6214	11083	PLUG,PIPE	EA	1
						END OF FIGURE		

Current part is item (3) on diagram. Available at www.oshkoshequipment.com